2STF2280

Low voltage high performance PNP power transistor

Preliminary data

Features

- Low collector-emitter saturation voltage
- High current gain characteristic
- Fast switching speed

Applications

- DC-DC converter, voltage regulation
- General purpose switching equipment

Description

The device is a PNP transistor manufactured using new “PB-HCD” (power bipolar high current density) technology. The resulting transistor shows exceptional high gain performances coupled with very low saturation voltage.

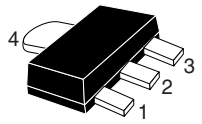

SOT-89

Figure 1. Internal schematic diagram

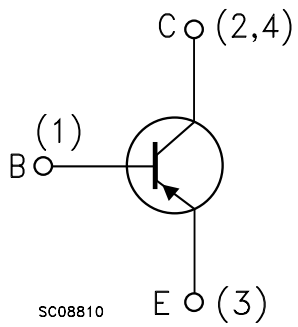

Table 1. Device summary

Order code	Marking	Package	Packaging
2STF2280	2280	SOT-89	Tape and reel

This is preliminary information on a new product now in development or undergoing evaluation. Details are subject to change without notice.

www.st.com

1 Electrical ratings

Table 2. Absolute maximum ratings

Symbol	Parameter	Value	Unit
V_{CBO}	Collector-base voltage ($I_E = 0$)	-80	V
V_{CEO}	Collector-emitter voltage ($I_B = 0$)	-80	V
V_{EBO}	Emitter-base voltage ($I_C = 0$)	-5	V
I_C	Collector current	2	A
I_{CM}	Collector peak current ($t_P < 5$ ms)	4	A
I_B	Base current	0.5	A
I_{BM}	Base peak current ($t_P < 5$ ms)	1	A
P_{TOT}	Total dissipation at $T_{amb} = 25°C$	1.4	W
T_J	Operating junction temperature	-65 to 150	°C
T_{STG}	Storage temperature		

Table 3. Thermal data

Symbol	Parameter	Value	Unit
R_{thJA} (1)	Thermal resistance junction-ambient max	89	°C/W

1. Device mounted on a PCB area of 1 cm².

2 Electrical characteristics

T_{CASE} = 25 °C unless otherwise specified.

Table 4. Electrical characteristics

Symbol	Parameter	Test conditions	Min.	Typ.	Max.	Unit
I_{CES}	Collector cut-off current (V_{BE} = 0)	V_{CE} = -80 V			-500	µA
I_{CEO}	Collector cut-off current (I_B = 0)	V_{CE} = -80 V			-1	mA
I_{EBO}	Emitter cut-off current (I_C = 0)	V_{EB} = -5 V			-100	µA
$V_{CEO(sus)}$ (1)	Collector-emitter sustaining voltage (I_B = 0)	I_C = -10 mA	-80			V
$V_{CE(sat)}$ (1)	Collector-emitter saturation voltage	I_C = -100 mA, I_B = -10 mA I_C = -1 A, I_B = -100 mA	-15		-100 -250	mV mV
$V_{BE(sat)}$ (1)	Base-emitter saturation voltage	I_C = -100 mA, I_B = -10 mA I_C = -1 A, I_B = -100 mA			-1 -1.1	V V
h_{FE} (1)	DC current gain	I_C = -100 mA, V_{CE} = -2 V I_C = -500 mA, V_{CE} = -2 V I_C = -1 A, V_{CE} = -2 V	140 100 80	190	300	
f_T	Transition frequency	I_C = -0.1 A, V_{CE} = -10 V		50		MHz

1. Pulse test: pulse duration ≤ 300 µs, duty cycle ≤ 2 %.

3 Package mechanical data

In order to meet environmental requirements, ST offers these devices in different grades of ECOPACK® packages, depending on their level of environmental compliance. ECOPACK® specifications, grade definitions and product status are available at: *www.st.com*. ECOPACK® is an ST trademark.

SOT-89 mechanical data

Dim.	mm		
	Min.	Typ.	Max.
A	1.40		1.60
B	0.44		0.56
B1	0.36		0.48
C	0.35		0.44
C1	0.35		0.44
D	4.40		4.60
D1	1.62		1.83
E	2.29		2.60
e	1.42		1.57
e1	2.92		3.07
H	3.94		4.25
K	1°		8°
L	0.89		1.20
R		0.25	

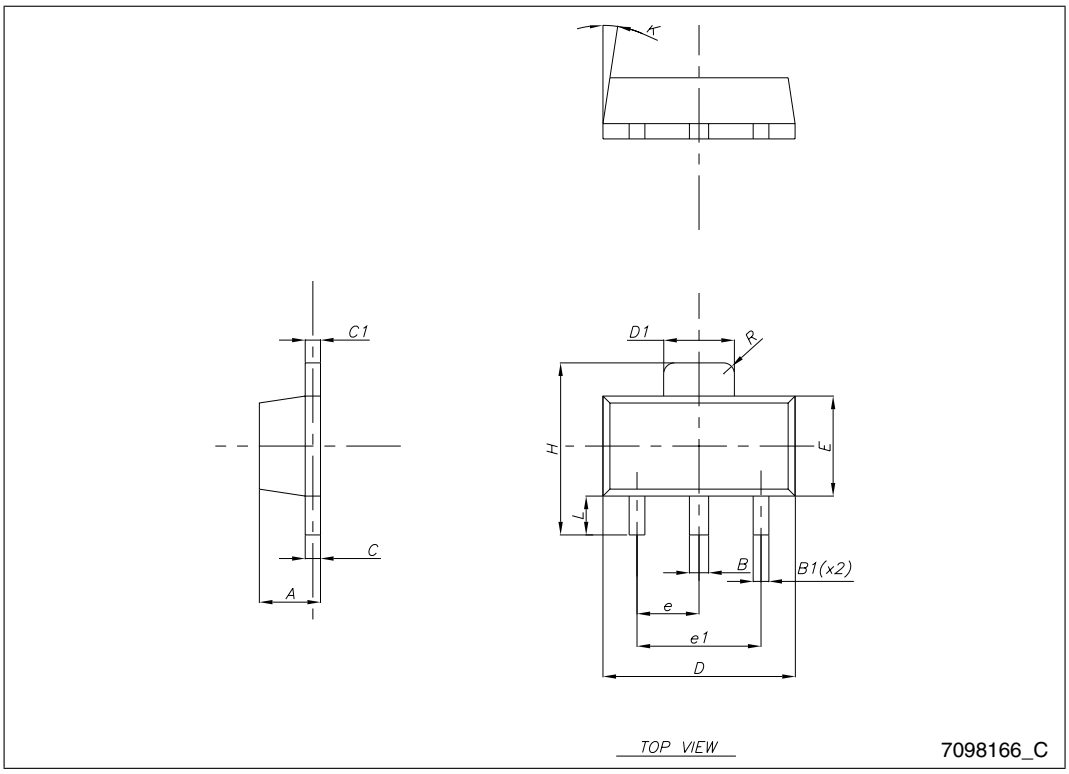

4 Revision history

Table 5. Document revision history

Date	Revision	Changes
14-Jan-2010	1	Initial release.

Please Read Carefully:

Information in this document is provided solely in connection with ST products. STMicroelectronics NV and its subsidiaries (“ST”) reserve the right to make changes, corrections, modifications or improvements, to this document, and the products and services described herein at any time, without notice.

All ST products are sold pursuant to ST’s terms and conditions of sale.

Purchasers are solely responsible for the choice, selection and use of the ST products and services described herein, and ST assumes no liability whatsoever relating to the choice, selection or use of the ST products and services described herein.

No license, express or implied, by estoppel or otherwise, to any intellectual property rights is granted under this document. If any part of this document refers to any third party products or services it shall not be deemed a license grant by ST for the use of such third party products or services, or any intellectual property contained therein or considered as a warranty covering the use in any manner whatsoever of such third party products or services or any intellectual property contained therein.

UNLESS OTHERWISE SET FORTH IN ST’S TERMS AND CONDITIONS OF SALE ST DISCLAIMS ANY EXPRESS OR IMPLIED WARRANTY WITH RESPECT TO THE USE AND/OR SALE OF ST PRODUCTS INCLUDING WITHOUT LIMITATION IMPLIED WARRANTIES OF MERCHANTABILITY, FITNESS FOR A PARTICULAR PURPOSE (AND THEIR EQUIVALENTS UNDER THE LAWS OF ANY JURISDICTION), OR INFRINGEMENT OF ANY PATENT, COPYRIGHT OR OTHER INTELLECTUAL PROPERTY RIGHT.

UNLESS EXPRESSLY APPROVED IN WRITING BY AN AUTHORIZED ST REPRESENTATIVE, ST PRODUCTS ARE NOT RECOMMENDED, AUTHORIZED OR WARRANTED FOR USE IN MILITARY, AIR CRAFT, SPACE, LIFE SAVING, OR LIFE SUSTAINING APPLICATIONS, NOR IN PRODUCTS OR SYSTEMS WHERE FAILURE OR MALFUNCTION MAY RESULT IN PERSONAL INJURY, DEATH, OR SEVERE PROPERTY OR ENVIRONMENTAL DAMAGE. ST PRODUCTS WHICH ARE NOT SPECIFIED AS "AUTOMOTIVE GRADE" MAY ONLY BE USED IN AUTOMOTIVE APPLICATIONS AT USER’S OWN RISK.

Resale of ST products with provisions different from the statements and/or technical features set forth in this document shall immediately void any warranty granted by ST for the ST product or service described herein and shall not create or extend in any manner whatsoever, any liability of ST.

ST and the ST logo are trademarks or registered trademarks of ST in various countries.

Information in this document supersedes and replaces all information previously supplied.

The ST logo is a registered trademark of STMicroelectronics. All other names are the property of their respective owners.

© 2010 STMicroelectronics - All rights reserved

STMicroelectronics group of companies

Australia - Belgium - Brazil - Canada - China - Czech Republic - Finland - France - Germany - Hong Kong - India - Israel - Italy - Japan - Malaysia - Malta - Morocco - Philippines - Singapore - Spain - Sweden - Switzerland - United Kingdom - United States of America

www.st.com